Z519/...

Mat.: 1.2363/54±2HRC

Info

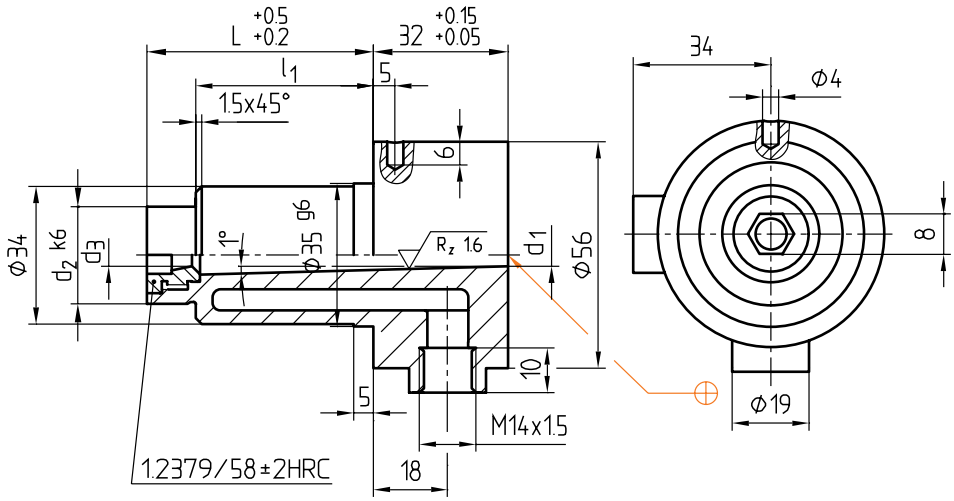

l_1	d_2	L	d_1	d_3	Nr./No.
44	**24**	**56**	**5,5**	**5**	Z519/24x 56/5,5/5
64		**76**			76
84		**96**		**6**	Z519/24x 96/5,5/6
104		**116**			116

Z53/...

Mat.: 1.2826/56±2HRC
≈ DIN 16757

Info

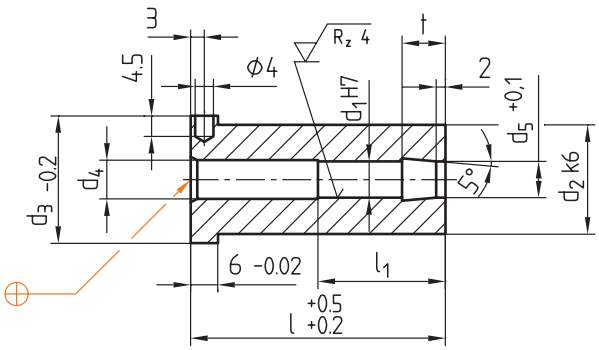

d_3	d_4	d_5	d_1	t	l_1	d_2	l	Nr./No.
16	4,5	4,2	4	7	18	**12**	**22**	Z53/12x22
							27	27
							36	36
							46	46
22	6,5	6,2	6		–	**18**	**22**	Z53/18x22
					–		**27**	27
					28		**36**	36
							46	46
							56	56

d_3	d_4	d_5	d_1	t	l_1	d_2	l	Nr./No.
22	6,5	6,2	6	7	22	**18**	**66**	Z53/18x66
							76	76
28	8,5	8,2	8	9,5	28	**24**	**36**	Z53/24x36
							46	46
							56	56
							66	66
							76	76
							86	86
							96	96

This is trial version
www.adultpdf.com

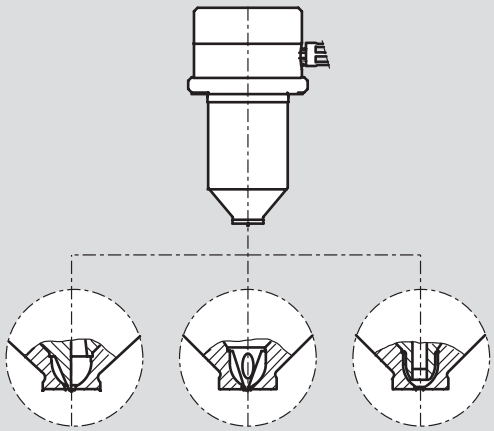

Z 104 E/...

Z 101/...
Z 104/...
Z 205/...

Z 103/...
Z 103 T/...
Z 206/...

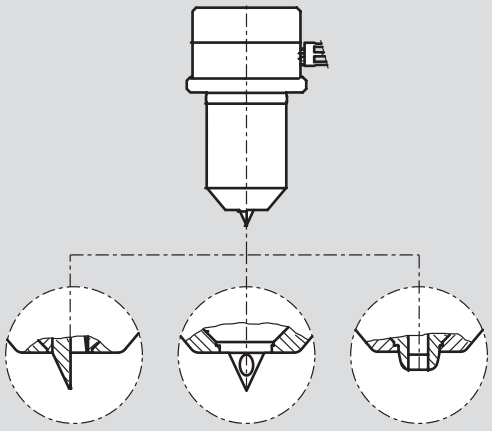

Z 104 GE/...

Z 101 G/...
Z 104 G/...
Z 104 GV/...
Z 207/...

Z 103/...
Z 103 T/...
Z 208/...

Neu
New
Nouveau

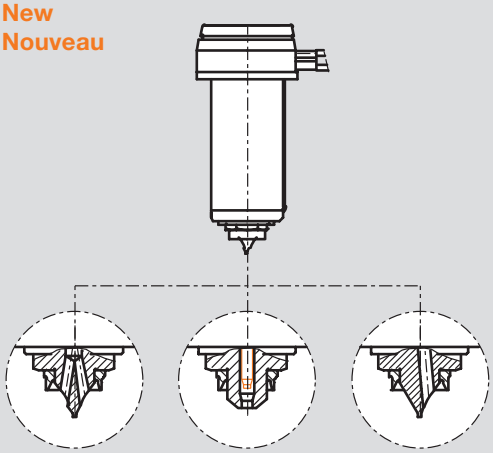

Z 3310/...

Z 3340/...

Z 3360/...

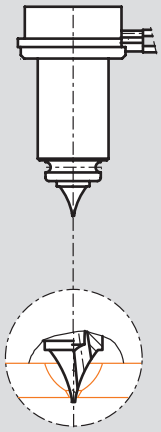

Z 200/...

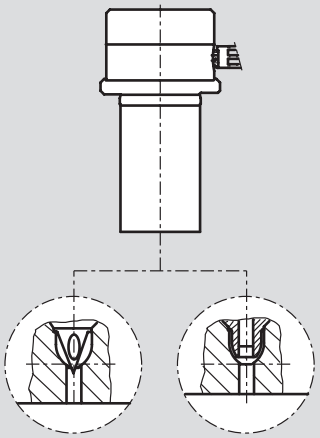

Z 101 R/...
Z 104 R/...

Z 103 R/...
Z 103 RT/...

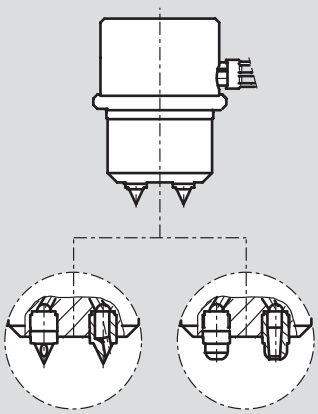

Z 101 M/...

Z 103 M/...

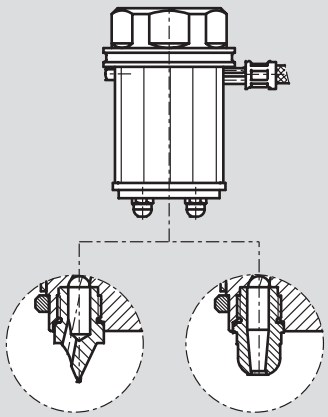

Z 10420/...

Z 10320/...

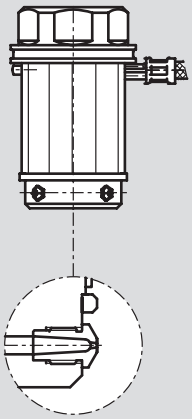

Z 10370/...

This is trial version
www.adultpdf.com